AUTOMATIC | PNEUMATIC | TYPE AN | DOUBLE ACTING | AIR TO OPEN | AIR TO CLOSE

DIAPHRAGM VALVE TYPE 14

TYPE——A14N

CONNECTION / FLANGED——JIS, DIN, ANSI

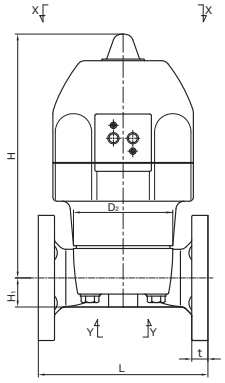

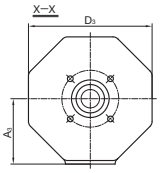

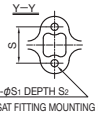

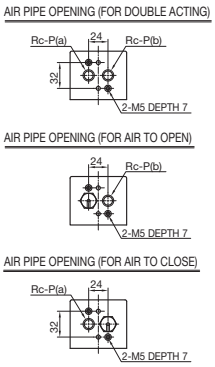

ACTUATOR SELECTION CHART

SIZE	ACTUATOR TYPE		
	DOUBLE ACTING	AIR TO OPEN	AIR TO CLOSE
15mm (1/2inch)	AN-1DA	AN-1AO	AN-1AS
20mm (3/4inch)			
25mm (1inch)	AN-2DA	AN-2AO	AN-2AS
32mm (1 1/4inch)			
40mm (1 1/2inch)	AN-3DA	AN-3AO	AN-3AS
50mm (2inch)	AN-4DA	AN-4AO	AN-4AS

For detailed specifications, see P.117

■ JIS, DIN (Unit: mm)

mm	D₂	D₃	H	H₁	A₃	S	S₁	S₂	P	JIS10K L	JIS10K t	DIN PN10 L	DIN PN10 t
15	54×66	130	186	19.5	68	25	7	13	1/4	110	12	130	12
20	54×66	130	188	17.5	68	25	7	13	1/4	120	13	150	13
25	67×80	130	193	18.5	68	25	7	13	1/4	130	13	160	13
32	67×80	130	197	22.5	68	25	7	13	1/4	142	16	180	16
40	108×108	174	293	27.5	92	45	9	15	1/4	180	16	200	20
50	123×123	174	302	36	92	45	9	15	1/4	210	20	230	22

■ ANSI (Unit: inch)

inch	mm	D₂	D₃	H	H₁	A₃	S	S₁	S₂	P	ANSI CLASS150 L GRINNELL STANDARD	ANSI CLASS150 L AV STANDARD	ANSI CLASS150 t
1/2	15	2.13×2.60	5.12	7.32	0.77	2.68	0.98	0.28	0.51	1/4	4.25	4.33	0.43
3/4	20	2.13×2.60	5.12	7.40	0.69	2.68	0.98	0.28	0.51	1/4	5.88	4.72	0.51
1	25	2.64×3.15	5.12	7.60	0.73	2.68	0.98	0.28	0.51	1/4	5.88	5.12	0.59
1 1/4	32	2.64×3.15	5.12	7.76	0.89	2.68	0.98	0.28	0.51	1/4	6.38	-	0.63
1 1/2	40	4.25×4.25	6.85	11.54	1.08	3.62	1.77	0.35	0.59	1/4	6.94	7.09	0.63
2	50	4.84×4.84	6.85	11.89	1.42	3.62	1.77	0.35	0.59	1/4	7.94	8.27	0.79

AUTOMATIC | PNEUMATIC | TYPE AV | DOUBLE ACTING | AIR TO OPEN | AIR TO CLOSE

DIAPHRAGM VALVE TYPE 14

TYPE——A14AV

CONNECTION / FLANGED——JIS, DIN, ANSI

(DOUBLE ACTING)

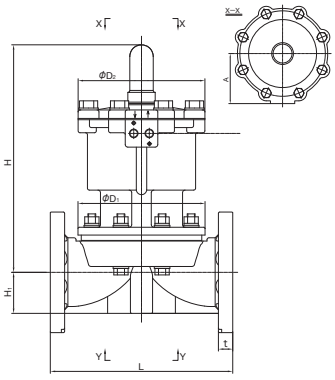

(AIR TO OPEN)

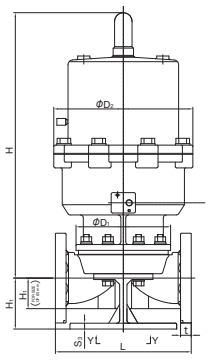

(AIR TO CLOSE)

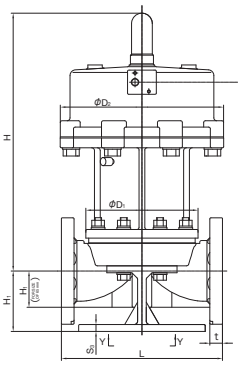

(DOUBLE ACTING)

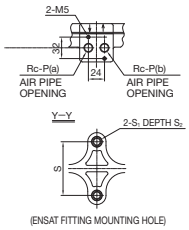

ACTUATOR SELECTION CHART

SIZE	ACTUATOR TYPE		
	DOUBLE ACTING	AIR TO OPEN	AIR TO CLOSE
65mm (2 1/2inch)	AV-1DA	AV-1AO	AV-1AS
80mm (3inch)	AV-2DA	AV-2AO	AV-2AS
100mm (4inch)	AV-3DA	AV-3AO	AV-3AS

For detailed specifications, see P.118

(AIR TO OPEN)

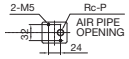

(AIR TO OPEN)
(AIR TO CLOSE)

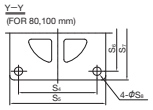

(AIR TO CLOSE)

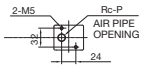

■ JIS、DIN (Unit：mm)

mm	D₁	D₂ DOUBLE ACTING	D₂ AIR TO OPEN, AIR TO CLOSE	A DOUBLE ACTING	H DOUBLE ACTING	H AIR TO OPEN	H AIR TO CLOSE	H₁ DOUBLE ACTING	H₁ AIR TO OPEN, AIR TO CLOSE	S DOUBLE ACTING	S AIR TO OPEN, AIR TO CLOSE	S₁ DOUBLE ACTING	S₁ AIR TO OPEN, AIR TO CLOSE	S₂ DOUBLE ACTING	S₂ AIR TO OPEN, AIR TO CLOSE	S₃ AIR TO OPEN, AIR TO CLOSE	S₄ AIR TO OPEN, AIR TO CLOSE	S₅ AIR TO OPEN, AIR TO CLOSE	S₆ AIR TO OPEN, AIR TO CLOSE	S₇ AIR TO OPEN, AIR TO CLOSE	S₈ AIR TO OPEN, AIR TO CLOSE	P	JIS10K L	JIS10K t U-PVC C-PVC	JIS10K t PP PVDF	DIN PN10 L	DIN PN10 t U-PVC C-PVC	DIN PN10 t PP PVDF
65	171	208	280	103	323	473	423	61	61	85	85	M8	M8	15	15	-	-	-	-	-	-	1/4	250	22	23	290	22	22
80	195	208	305	103	354	550	455	63	109	100	-	M12	-	22	-	12	180	220	175	215	19	1/4	280	22	23	310	24	24
100	235	250	385	120	417	601	582	78	119	120	-	M12	-	22	-	15	230	270	220	260	19	1/4	340	22	24	350	24	26

■ ANSI (Unit：inch)

inch	mm	D₁	D₂ DOUBLE ACTING	D₂ AIR TO OPEN, AIR TO CLOSE	A DOUBLE ACTING	H DOUBLE ACTING	H AIR TO OPEN	H AIR TO CLOSE	H₁ DOUBLE ACTING	H₁ AIR TO OPEN, AIR TO CLOSE	S DOUBLE ACTING	S AIR TO OPEN, AIR TO CLOSE	S₁ DOUBLE ACTING	S₁ AIR TO OPEN, AIR TO CLOSE	S₂ DOUBLE ACTING	S₂ AIR TO OPEN, AIR TO CLOSE	S₃ AIR TO OPEN, AIR TO CLOSE	S₄ AIR TO OPEN, AIR TO CLOSE	S₅ AIR TO OPEN, AIR TO CLOSE	S₆ AIR TO OPEN, AIR TO CLOSE	S₇ AIR TO OPEN, AIR TO CLOSE	S₈ AIR TO OPEN, AIR TO CLOSE	P	ANSI CLASS150 L GRINNELL STANDARD	ANSI CLASS150 L AV STANDARD	ANSI CLASS150 t U-PVC C-PVC	ANSI CLASS150 t PP PVDF
2 1/2	65	6.73	8.19	11.02	4.06	12.72	18.62	16.65	2.40	2.40	3.35	3.35	M8	M8	0.59	0.59	-	-	-	-	-	-	1/4	-	9.84	0.87	0.91
3	80	7.68	8.19	12.01	4.06	13.94	21.65	17.91	2.48	4.29	3.94	-	M12	-	0.87	-	0.47	7.09	8.66	6.89	8.46	0.75	1/4	10.37	11.02	0.87	0.91
4	100	9.25	9.84	15.16	4.72	16.42	23.66	22.91	3.07	4.69	4.72	-	M12	-	0.87	-	0.59	9.06	10.63	8.66	10.24	0.75	1/4	12.93	13.39	0.87	0.91

PRODUCT MODEL CODE LIST — MANUAL

ACTUATION	TYPE	OPERATING SYSTEM	BODY MATERIAL	SEAL MATERIAL	CONNECTION	STANDARD	SIZE	HIGH PURITY SERIES
V	14	MH	*	*	F	*	***	1
V MANUAL VALVE	14 TYPE 14	MH ROUND HANDLE	U U-PVC C C-PVC P PP F PVDF G PVDF+PPG	E EPDM T PTFE	F FLANGED	1 JIS10K D DIN A ANSI	015 15mm ~ 100 100mm	1 LUBRICANT FREE

PRODUCT MODEL CODE LIST — AUTOMATIC

ACTUATION	TYPE	ACTUATOR TYPE	ACTION / POWER SOURCE	BODY MATERIAL	SEAL MATERIAL	CONNECTION	STANDARD	SIZE	HIGH PURITY SERIES
A	14	*	*	*	*	F	*	***	1
A AUTOMATIC VALVE	14 TYPE 14	PNEUMATIC N TYPE AN V TYPE AV P TYPE AP ELECTRIC H TYPE H M TYPE M	PNEUMATIC F DOUBLE ACTING G AIR TO OPEN H AIR TO OPEN (TYPE AP,For 1.0MPa) S AIR TO CLOSE ELECTRIC 1 Single-Phase 100V 2 Single-Phase 200V D DC24V	U U-PVC C C-PVC P PP F PVDF	E EPDM T PTFE	F FLANGED	1 JIS10K D DIN A ANSI	015 15mm ~ 100 100mm	1 LUBRICANT FREE

MANUAL

DIAPHRAGM VALVE TYPE 14

TYPE——V14MH

CONNECTION / FLANGED——JIS, DIN, ANSI

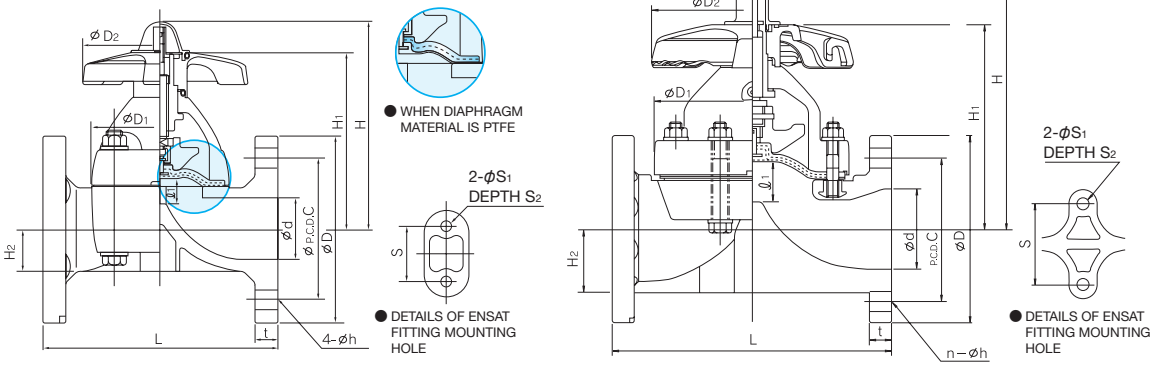

■ JIS, DIN (Unit: mm)

mm	d	D1	D2	ℓ1	H	H1	H2	S	S1	S2	JIS10K D	JIS10K C	JIS10K n	JIS10K h	JIS10K L	JIS10K t U-PVC C-PVC	JIS10K t PP PVDF	DIN PN10 D	DIN PN10 C	DIN PN10 n	DIN PN10 h	DIN PN10 L	DIN PN10 t U-PVC C-PVC	DIN PN10 t PP PVDF
15	16	54×66	100	10	104	86	19.5	25	7	13	95	70	4	15	110	12	12	95	65	4	14	130	12	12
20	20	54×66	100	10	106	88	17.5	25	7	13	100	75	4	15	120	13	13	105	75	4	14	150	13	13
25	25	67×80	100	12	111	93	18.5	25	7	13	125	90	4	19	130	13	13	115	85	4	14	160	13	13
32	32	67×80	100	12	116	97	22.5	25	7	13	135	100	4	19	142	16	16	140	100	4	18	180	16	16
40	40	108×108	156	21	177	144	27.5	45	9	15	140	105	4	19	180	16	16	150	110	4	18	200	20	20
50	52	123×123	156	25	191	158	36.0	45	9	15	155	120	4	19	210	20	20	165	125	4	18	230	22	22
65	67	175	220	34	266	188	61	85	11	20	175	140	4	19	250	22	23	185	145	4	18	290	22	22
80	78	201	220	42	280	202	63	100	15	28	185	150	8	19	280	22	23	200	160	8	18	310	24	24
100	100	241	257	50	329	241	78	120	15	28	210	175	8	19	340	22	24	220	180	8	18	350	24	26

■ ANSI (Unit: inch)

inch	mm	d	D1	D2	ℓ1	H	H1	H2	S	S1	S2	ANSI CLASS150 D	C	n	h	L GRINNELL STANDARD	L AV STANDARD	t U-PVC C-PVC	t PP PVDF
1/2	15	0.63	2.13×2.60	3.94	0.39	4.09	3.39	0.77	0.98	0.28	0.51	3.50	2.38	4	0.62	4.25	4.33	0.43	0.43
3/4	20	0.79	2.13×2.60	3.94	0.39	4.17	3.46	0.69	0.98	0.28	0.51	3.88	2.75	4	0.62	5.88	4.72	0.51	0.51
1	25	0.98	2.64×3.15	3.94	0.47	4.37	3.66	0.73	0.98	0.28	0.51	4.25	3.12	4	0.62	5.88	5.12	0.59	0.59
1 1/4	32	1.26	2.64×3.15	3.94	0.47	4.57	3.82	0.89	0.98	0.28	0.51	4.62	3.50	4	0.62	6.38	-	0.63	0.63
1 1/2	40	1.57	4.25×4.25	6.14	0.83	6.97	5.67	1.08	1.77	0.35	0.59	5.00	3.88	4	0.62	6.94	7.09	0.63	0.63
2	50	2.05	4.84×4.84	6.14	0.98	7.52	6.22	1.42	1.77	0.35	0.59	6.00	4.75	4	0.75	7.94	8.27	0.79	0.79
2 1/2	65	2.64	6.89	8.66	1.34	10.47	7.40	2.40	3.35	0.43	0.79	7.00	5.50	4	0.75	-	9.84	0.87	0.91
3	80	3.07	7.91	8.66	1.65	11.02	7.95	2.48	3.94	0.59	1.10	7.50	6.00	4	0.75	10.37	11.02	0.87	0.91
4	100	3.94	9.49	10.12	1.97	12.95	9.49	3.07	4.72	0.59	1.10	9.00	7.50	8	0.75	12.93	13.39	0.87	0.94