Type 1000 Stainless Steel Ball Valves

Full port, 3-pce body design, Threaded or socket welding ends

Page 8 for Pressure-Temperature Ratings

Features
- Blowout-proof stem
- Swing-away body for maintenance ease
- Choice of threaded ends:
  - Rc threads to BS 21 (Fig. U3TZFM)
  - NPT threads to ASME B1.20.1 (Fig. AKU3TZFM)
  - Socket welding ends to BS 5351 (Fig. SWU3TZFM)
  - Socket welding ends to ASME B16.11 (Fig. AWU3TZFM)

U3TZFM

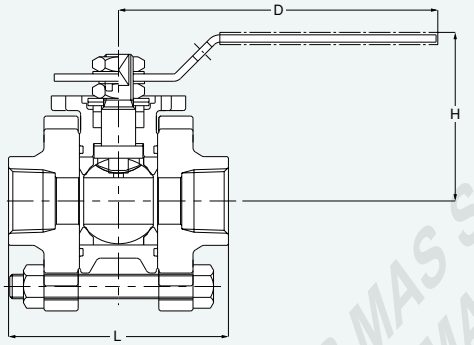

Standard materials

Parts	Materials
Body	CF8M
Body cap	CF8M
Ball	316 or CF8M
Stem	316
Seat	HYPATITE® PTFE
Gland packing	PTFE
Gasket	PTFE
Handle	Plastic covered S.S.

End-to-end dimensions: KITZ standard

Dimensions

Unit: mm

Valve Size	in.	1/4	3/8	1/2	3/4	1	1 1/4	1 1/2
	mm	8	10	15	20	25	32	40
Ball Bore		10	10	14	19	24	30	38
L		63	63	71	90	103	110	127
H		48	48	60	69	82	88	104
D		120	120	130	130	150	150	180

Valve operator
Lever operation
Oval handle as option

Test pressure
Shell (Hydrostatic): 10.34MPa (1500psi)
Seat (Air): 0.55MPa (80psi)

Note
・Use U3TZM for size 2″.

Type 1000 Stainless Steel Ball Valves

Regular port, 3-pce body design, Threaded or socket welding ends

Page 8 for Pressure-Temperature Ratings

Features
- Blowout-proof stem
- Swing-away body for maintenance ease
- Choice of threaded ends:
  - Rc threads to BS 21 (Fig. U3TZM)
  - NPT threads to ASME B1.20.1 (Fig. AKU3TZM)
  - Socket welding ends to BS 5351 (Fig. SWU3TZM)
  - Socket welding ends to ASME B16.11 (Fig. AWU3TZM)

U3TZM

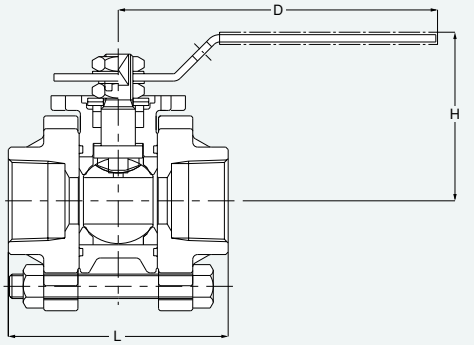

Standard materials

Parts	Materials
Body	CF8M
Body cap	CF8M
Ball	316 or CF8M
Stem	316
Seat	HYPATITE® PTFE
Gland packing	PTFE
Gasket	PTFE
Handle	Plastic covered S.S.

End-to-end dimensions: KITZ standard

Dimensions

Unit: mm

Valve Size	in.	1/2	3/4	1	1 1/4	1 1/2	2
	mm	15	20	25	32	40	50
Ball Bore		10	14	19	24	30	38
L		63	71	90	103	110	127
H		48	60	69	83	88	104
D		120	130	130	150	150	180

Valve operator
Lever operation
Oval handle as option

Test pressure
Shell (Hydrostatic): 10.34MPa (1500psi)
Seat (Air): 0.55MPa (80psi)

Note
・Use U3TZFM for sizes 1/4″ & 3/8″.

PROVIDED BY: PT SINAR MAS SAKTI
TEL: (62 21) 6108088 FAX: (62 21) 6293470 EMAIL: sales@sinarsakti.com