Internationally patented

Type BS (Spring-Return)
Type BSW (Spring-Return with Manual Operation Device)

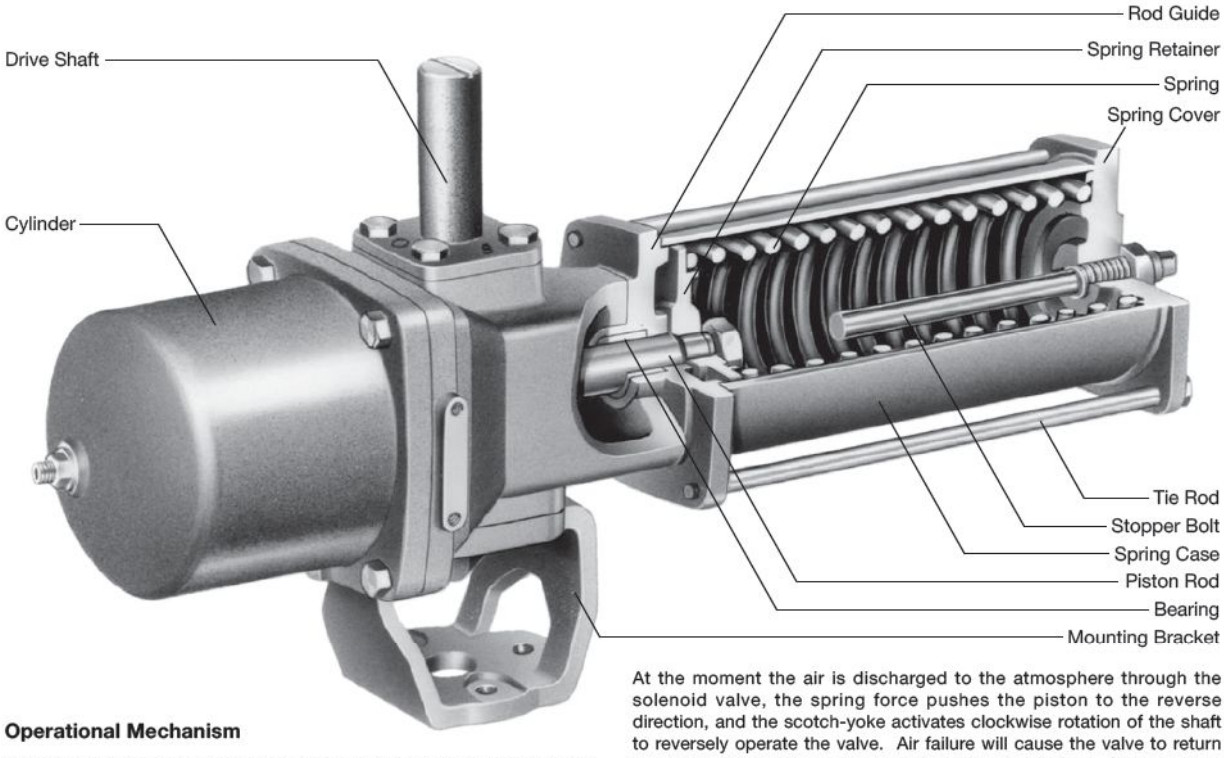

Operational Mechanism

The air pressure supplied into the cylinder pushes the piston outward and energizes its movement to rotate the scotch-yoke counterclockwise, compressing the spring. The scotch-yoke converts linear movement of the piston rod to counterclockwise rotational movement of the drive shaft by 90°, to open or close the valve, following the preset mode.

At the moment the air is discharged to the atmosphere through the solenoid valve, the spring force pushes the piston to the reverse direction, and the scotch-yoke activates clockwise rotation of the shaft to reversely operate the valve. Air failure will cause the valve to return to the original open or closed position automatically, following the preset mode, unlike the valve driven by Type B actuator.

The BSW actuator is driven with the same mechanism as Type BS, but provided with a handwheel for manual operation. Please bear it in mind that the handwheel must be **factory mounted**.

Type B Actuator Output Torque

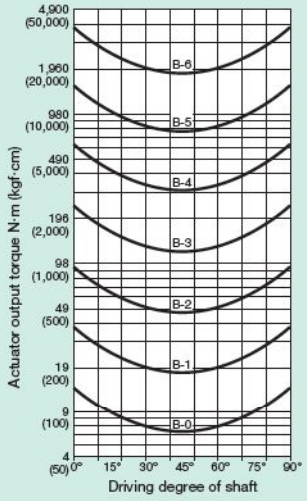

Type BS/BSW Actuator Output Torque

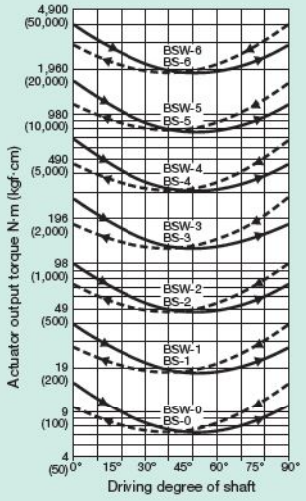

— Output torque when air pressure is supplied.
--- Output torque caused by spring force when air pressure is exhausted.

Operating pressure:
0.4MPa (or 60psi)

Type BS (Spring-Return)

Type BS-0 to BS-5

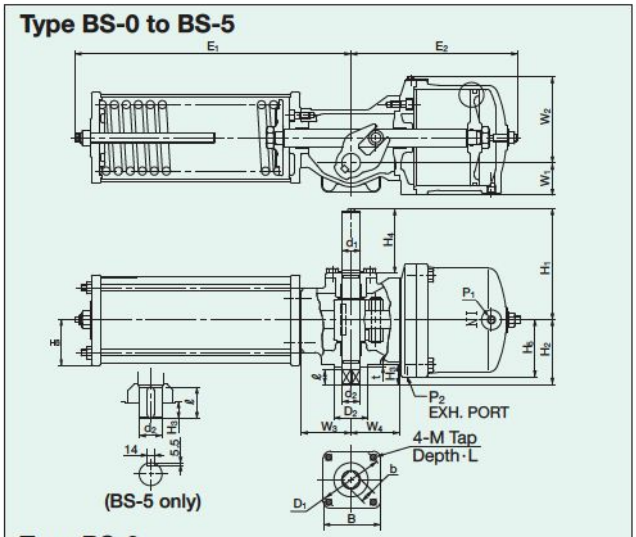

Type BS-6

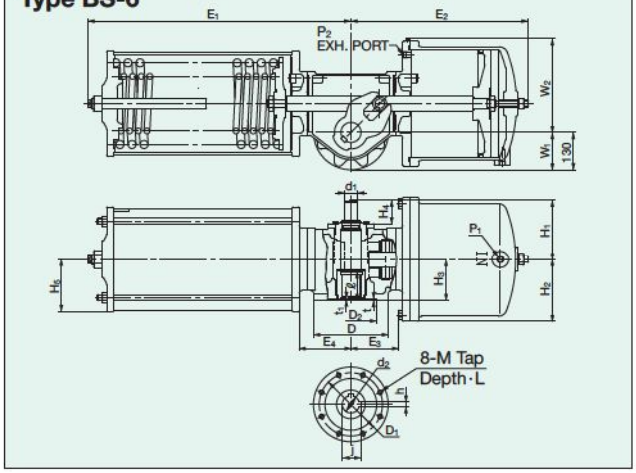

Type BSW
(Spring-Return with Manual Operation Device)

Type BSW-0 to BSW-5

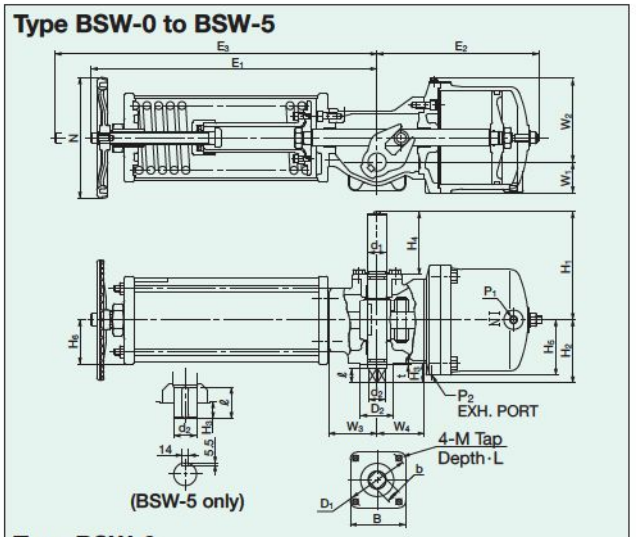

Type BSW-6

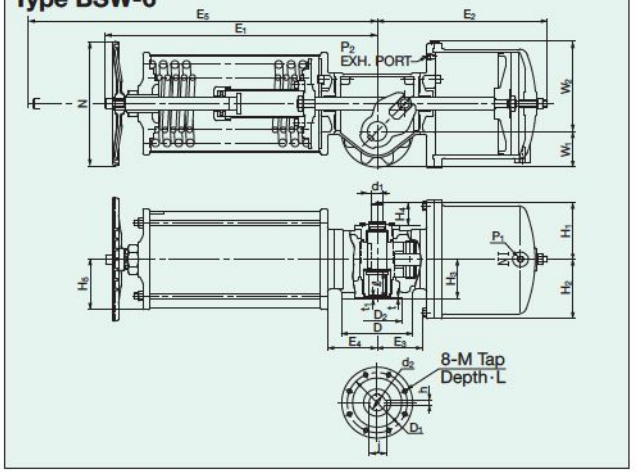

Type BS Actuator Dimensions

mm

Type	E_1	E_2	E_3	E_4	W_1	W_2	W_3	W_4	H_1	H_2	H_3	H_4	H_5	H_6	D	D_1	D_2	d_1	d_2	b	B	ℓ	t	t_1	M	L	h	j	P_1	P_2
BS-0	163	127	—	—	40	62	—	38	75	53	18	40	41	—	—	50	35	12	15	12	50	12	2	—	M6	9	—	—	BSPT1/8	BSPT1/8
BS-1	239	166	—	—	30	83	47	38	140	60	18	94	52	46	—	50	35	16	15	12	50	12	2	—	M6	9	—	—	BSPT1/4	BSPT1/8
BS-2	335	215	—	—	38	106	62	56	153	77	23	99	68	54	—	70	55	22	21	17	70	17	2	—	M8	12	—	—	BSPT1/4	BSPT1/8
BS-3	451	286	—	—	52	140	80	78	180	104	32	104	92	73	—	102	70	30	28.5	23	95	23	3	—	M10	15	—	—	BSPT1/4	BSPT1/4
BS-4	575	361	—	—	81	188	100	91	230	138	43	127	130	99	—	125	85	45	41	32	114	32	3	—	M12	19	—	—	BSPT1/2	BSPT1/4
BS-5	745	461	—	—	117	256	128	114	225	167	34	91	182	139	—	165	130	45	46	—	162	63	3	—	M20	32	—	—	BSPT1/2	BSPT1/4
BS-6	931	638	169	180	130	326	—	—	208	217	144	82	184	—	260	220	180	45	60	—	—	99	4	5	M16	26	18	64.4	BSPT1/2	BSPT1/2

Type BSW Actuator Dimensions

mm

Type	E_1	E_2	E_3	E_4	E_5	W_1	W_2	W_3	W_4	H_1	H_2	H_3	H_4	H_5	H_6	D	D_1	D_2	d_1	d_2	b	B	ℓ	t	t_1	M	L	h	j	N	P_1	P_2
BSW-0	185	127	218	—	—	40	62	—	38	75	53	18	40	41	—	—	50	35	12	15	12	50	12	2	—	M6	9	—	—	90	BSPT1/8	BSPT1/8
BSW-1	259	166	315	—	—	30	83	47	38	140	60	18	94	52	46	—	50	35	16	15	12	50	12	2	—	M6	9	—	—	100	BSPT1/4	BSPT1/8
BSW-2	362	215	438	—	—	38	106	62	56	153	77	23	99	68	54	—	70	55	22	21	17	70	17	2	—	M8	12	—	—	140	BSPT1/4	BSPT1/8
BSW-3	482	286	582	—	—	52	140	80	78	180	104	32	104	92	73	—	102	70	30	28.5	23	95	23	3	—	M10	15	—	—	200	BSPT1/4	BSPT1/4
BSW-4	609	361	734	—	—	81	188	100	91	230	138	43	127	130	99	—	125	85	45	41	32	114	32	3	—	M12	19	—	—	250	BSPT1/2	BSPT1/4
BSW-5	795	461	956	—	—	117	256	128	114	225	167	34	91	182	139	—	165	130	45	46	—	162	63	3	—	M20	32	—	—	300	BSPT1/2	BSPT1/4
BSW-6	1006	638	169	180	1250	130	326	—	—	208	217	144	82	184	—	260	220	180	45	60	—	—	99	4	5	M16	26	18	64.4	450	BSPT1/2	BSPT1/2

Cylinder Volume and Air Supply Requirements

On installation of control system for actuators, air requirements of actuators should be carefully studied to ensure that a sufficient pressure is provided. Actuators should be activated by clean air which is made free from moisture by air driers. For frequent operation, occasional lubrication is recommended for higher efficiency and longer service life.

Cylinder volume for Type B actuators

Type \ Cylinder	V_1	V_2
B-0	0.05	0.07
B-1	0.17	0.17
B-2	0.43	0.43
B-3	1.04	1.09
B-4	2.69	2.75
B-5	6.53	6.80
B-6	15.90	14.20

(liters)

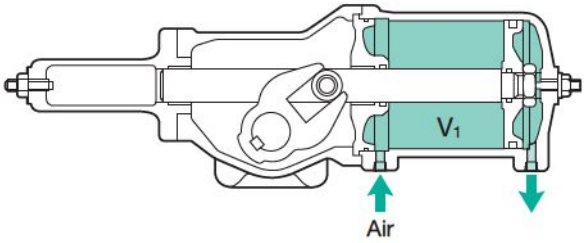

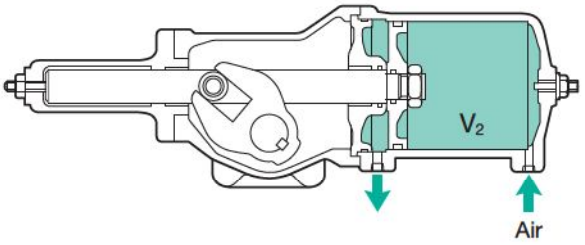

Cylinder volume for Type BS/BSW actuators

Type \ Cylinder	V
BS-0/BSW-0	0.17
BS-1/BSW-1	0.33
BS-2/BSW-2	0.82
BS-3/BSW-3	2.23
BS-4/BSW-4	5.39
BS-5/BSW-5	13.70
BS-6/BSW-6	30.20

(liters)

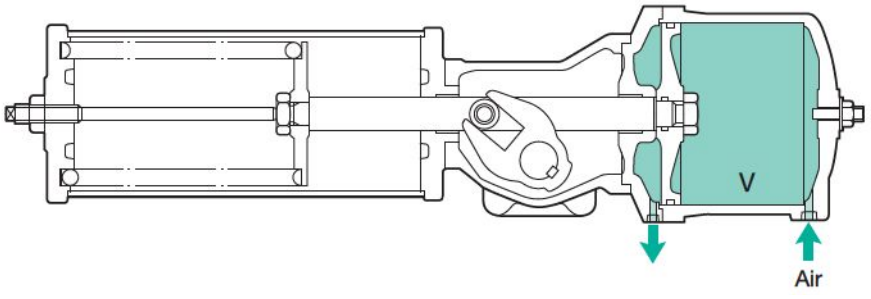

Air Supply Requirement (Flow Rate)

Actuators should be supplied with the air, sufficient to operate the valve through a full stroke from the open to closed position and vice versa in "t" seconds, as converted into flow rate per minute. The required air volume "Q" is calculated as follows.

$$Q = V\left(\frac{P+0.1013}{0.1013}\right) \times \frac{60}{t} (N\ell/min.)$$

Q= Air supply requirement per minute (Nℓ/min.)
V= Cylinder volume (liters)
V_1 or V_2, whichever larger, for Type B actuators
P= Supply pressure (MPaG)
t = Time required per stroke (seconds)

All accessories to be mounted on the actuator such as solenoid valves, air filters, regulators, and air supply pipes, should have sufficient capacity to accommodate air flow rate (Q) calculated here.

Air Consumption

Air consumption means the volume of air discharged into the atmosphere from actuator operation "n" cycles (double strokes) per hour as converted into volumes per minute. The value is calculated as follows.

Type B actuator:

$$Q = (V_1+V_2)\left(\frac{P+0.1013}{0.1013}\right) n \times \frac{1}{60} (N\ell/min.)$$

Type BS or BSW actuator:

$$Q = V\left(\frac{P+0.1013}{0.1013}\right) n \times \frac{1}{60} (N\ell/min.)$$

For selecting compressors and air reservoirs for these actuators, determine the capacities based on the air consumption values obtained from the above calculations, adding an extra 30% as allowance for possible loss of air caused by solenoid valves, accessories, piping, etc.

⚠CAUTION

1. For manual operation, ensure in advance to (a) shut off the supply of air and (b) discharge of the air left in the housing to the atmosphere.
   For double-action actuators, the pressure equalizing valve should be opened in advance.
2. After manual operation, the lever handle should be removed. Operating actuators with handles attached is extremely dangerous.
3. Long bolts securing the spring case should not be loosened or unscrewed, unless required for maintenance, particularly in case of manual operation of spring-return actuators. A compressed spring may suddenly break out, causing an extreme danger.
4. KITZ Operation Manual is available for safe and efficient operation of KITZ B Series actuators, on request.

Manual Operation

For double-action type actuators, manual lever handles for Type B-1 through B-4, and manual operation devices for Type B-5 and B-6 are readily available.
For spring-return type actuators, specify Type BSW on your order for provision of manual operation.

Air Piping for Actuators

When assembling air supply pipes (either copper pipes or covered copper pipes) to actuators:

1. Select pipes of suitable diameter and wall thickness, according to the table given below.
2. Seal all pipe joints securely to avoid leakage since accessories are mounted along the pipes between air supply source and actuator. Use PTFE tapes for sealing, making sure that loose tape ends do not extend into the pipe: they may block ports and air supply may be adversely effected.

Diameter of piping port threads (BSPT)

Size	–0	–1	–2	–3	–4	–5	–6
Type B	⅛	¼	¼	¼	¼	½	½
Type BS / BSW	⅛	¼	¼	¼	½	½	½

Type B Actuators (Double-Action)

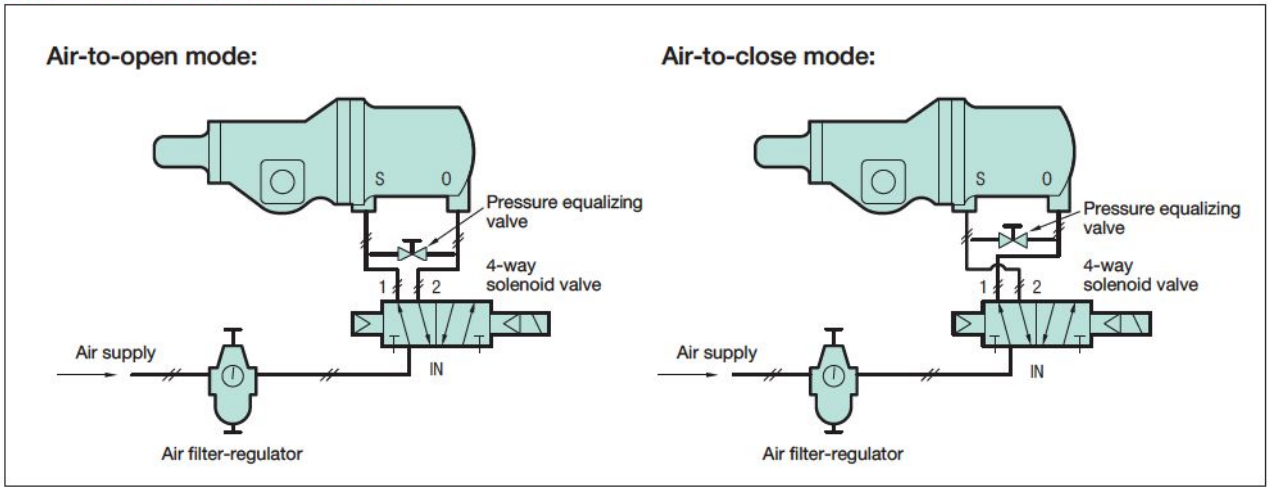

Type BS/BSW Actuators (Spring-return)

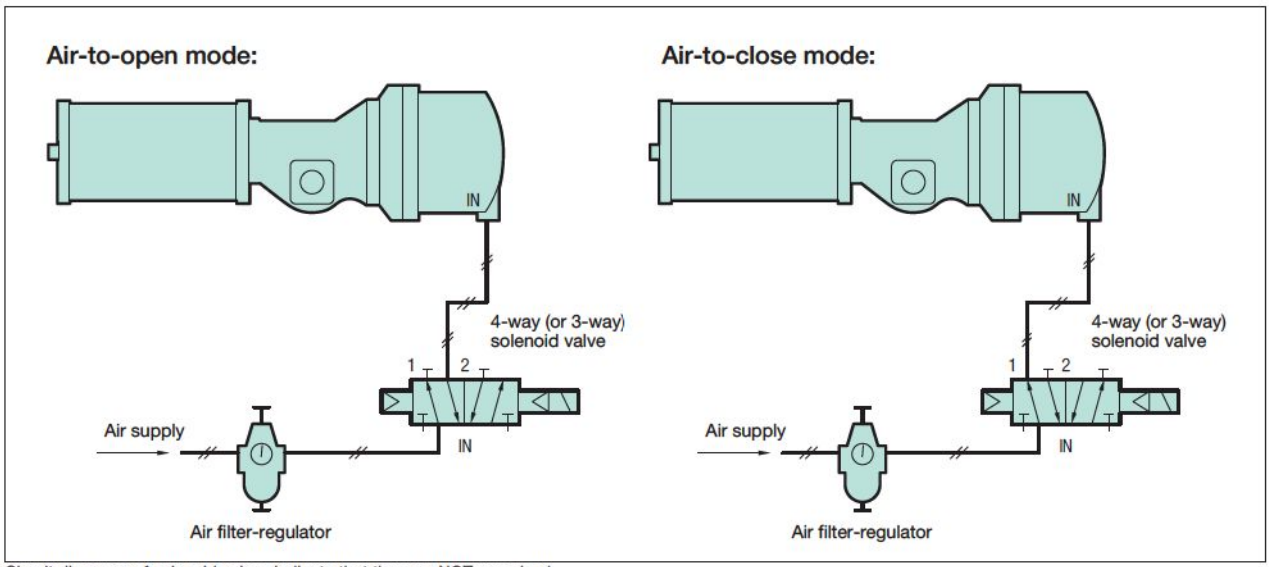

Circuit diagrams of solenoid valves indicate that they are NOT energized.

Construction Details of Type BS Actuators

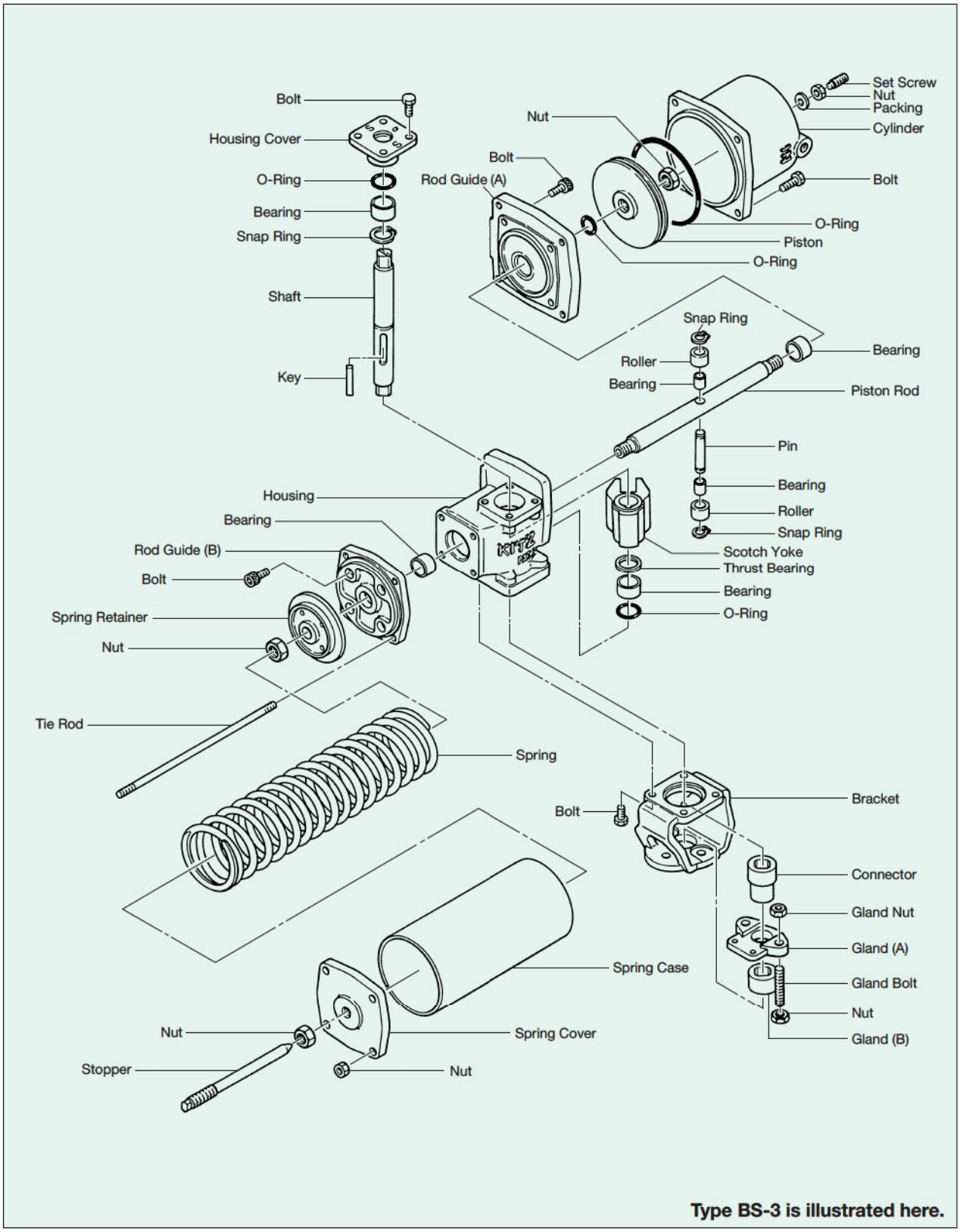

Type BS-3 is illustrated here.

Optional Accessories

The following optional accessories are recommended for KITZ B Series actuators.
For supply of other accessories, contact your local KITZ distributors.

Product code	Purpose	Specifications
Limit Switch **LS** Weather-proof **LS-F** Explosion-proof	For initiating electric signals to check open or close position of the valve: A separate limit switch is recommended for each of open and close indications.	**LS** AC: 10A/125V 10A/250V 10A/480V DC: 0.8A/115V 0.4A/230V **LS-F** AC: 5A/125V 5A/250V DC: 0.8A/125V 0.4A/250V Contact circuit: 2-Circuit double break
Solenoid Valve **SOV** Weather-proof **SOV-F** Explosion-proof	Flow switching over air flow by electric signal; 4-way solenoid valves for double-action actuators, 4-way solenoid valves for spring-return actuators, with one OUT port plugged, or 3-way solenoid valves used.	Connected pipe: BSPT1/4 Working pressure: 0~0.97MPa (0~9.9kgf/cm² or 0~140psi.) Orfice diam: 6mm Electric current: 100V/50Hz 100V/60Hz 110V/60Hz 200V/50Hz 200V/60Hz 220V/60Hz Supply source connection Weather-proof: DIN terminals or terminal boxes Explosion-proof: Electric wire pipe threading
Air Filter-Regulator **F + R** (With pressure gauge)	For removing moisture, water and other foreign objects from operating air and for regulating air pressure at a desire level.	Connected pipe: BSPT1/4, BSPT1/2 Working pressure: Max. inlet pressure; 0.97MPa (9.9kgf/cm² or 140psi.) Max. outlet pressure; 0.04~0.83MPa (0.5~8.5kgf/cm² or 8~120psi.)
Speed Controller **SP**	For reducing actuator operating speeds.	Connected pipe: BSPT1/8, BSPT1/4, BSPT1/2 Operation pressure: 0.97MPa (9.9kgf/cm² or 140psi.) max.
Quick Exhaust Valve **QE**	For increasing actuator operation speed. This device can increase operation speed only when the actuator is operated by the spring. Positioners cannot be used together with a quick exhaust valves.	Connected pipe: BSPT1/4, BSPT1/2 Working pressure: 0.97MPa (9.9kgf/cm² or 140psi.) max.
Valve Positioner **P** (Complete with pressure gauge)	For controlling the flow rate. A positioner can be mounted on either double-action or spring-return actuators. Operation mode, air-to-open or air-to-close, can be changed simply by reversing cam direction.	Connected pipe: BSPT1/4 (pressure gauge: BSPT1/8) Supply pressure: 0.29~0.69MPa (3~7kgf/cm² or 43~100psi.) Signal pressure: 0.02~0.1MPa (0.2~1.0kgf/cm² or 3~15psi.) or specified Lineality: ±2% max. Hysteresis: 1% max. Air consumption: 20Nℓ/min. max. (at supply pressure 0.49MPa (5kgf/cm² or 70psi.))
Silencer **K**	For reducing the air exhaust noise of solenoid valves. The device is installed at the exhaust port of a solenoid valve.	Connected pipe: BSPT1/8, BSPT1/4, BSPT1/2 Working pressure: 0.9MPa (9.2kgf/cm² or 130psi.) max.
Air Filter **F**	For removing moisture, water and other foreign objects from operating air.	Connected pipe: BSPT1/4, BSPT1/2 Working pressure: 0.97MPa (9.9kgf/cm² or 140psi.) max.
Lubricator **L**	Basically, KITZ B Series actuators and their solenoid valves can be operated lubrication-free. However, when actuators are subject to high frequency of operation for long period of time, lubrication is recommended.	Connected pipe: BSPT1/4, BSPT1/2 Working pressure: 0.97MPa (9.9kgf/cm² or 140psi.) max. Recommended oil: Turbine oil #90~#140
Pressure Equalizing Valve **C**	For equalizing the internal air pressure to the atmospheric level for manual operation of actuators.	Connected pipe: BSPT1/4 Working pressure: 1.37MPa (14kgf/cm² or 200psi.) max.

Above specifications are KITZ standards. Different specifications are optionally available.