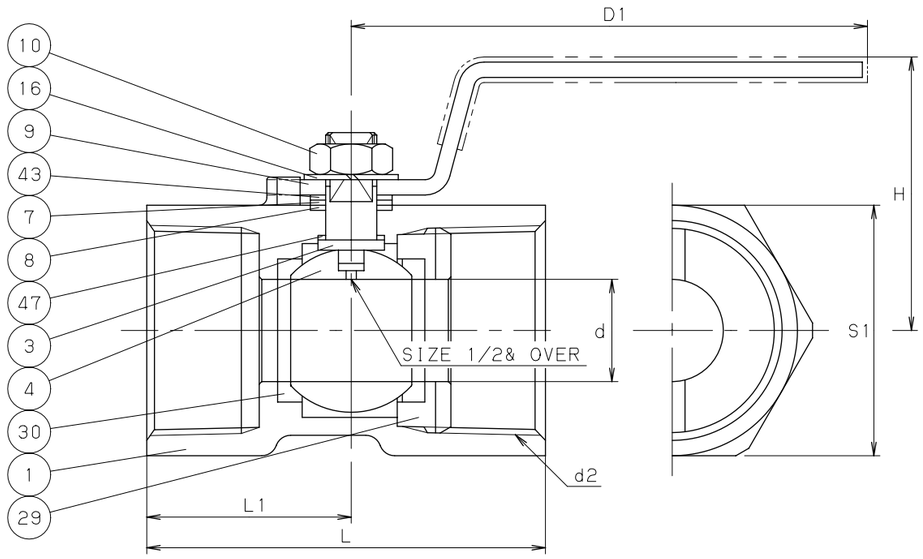

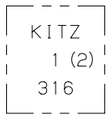

MARKING ON THE BODY

HANDLE MARKING

DIMENSIONS UNIT:mm

NOMINAL SIZE	d	H	D1	L	d2	S1	L1	APPROX. MASS (kg)	
1/4	4.5	31	60	39	Rc 1/4	17	19	0.06	
3/8	6.8	36	70	44	Rc 3/8	21	21	0.10	
1/2	9.2	41	85	56.5	Rc 1/2	25	27.5	0.18	
3/4	12.5	44	85	59	Rc 3/4	32	30	0.27	
1	16	48	100	71	Rc 1	38	36	0.40	
1.1/4	20	54	100	78	Rc 1.1/4	49	40	0.70	
1.1/2	24.5	65	125	83	Rc 1.1/2	53	42.5	0.83	
2	32	72	125	100	Rc 2	65	51	1.3	

NOTE (1) PLASTIC COVERING.
(2) VALVE SIZE IDENTIFICATION.

NO	NAME OF PARTS	QTY	MATERIALS	SPECIFICATIONS
1	BODY	1	STAINLESS STEEL	A351 Gr.CF8M/SCS14A
3	STEM	1	STAINLESS STEEL	316SS
4	BALL	1	STAINLESS STEEL	316SS
7	GLAND	1	STAINLESS STEEL	316SS
8	GLAND PACKING	1	G/F PTFE	
9	HANDLE	1	STAINLESS STEEL (1)	
10	SELF LOCKING NUT	1	STAINLESS STEEL	
16	SPRING WASHER	1	STAINLESS STEEL	
29	INSERT	1	STAINLESS STEEL	316SS
30	BALL SEAT	2	G/F PTFE	
43	SPRING	1	STAINLESS STEEL	
47	THRUST WASHER	1	REINFORCED PTFE	

STANDARD		
	FACE TO FACE OR END TO END	KITZ STANDARD
	END CONNECTION	JIS B0203
	WALL THICKNESS	KITZ STANDARD
	PRESSURE TEST	KITZ STANDARD
FIGURE		UTKM

TYPE 600 CAST STAINLESS STEEL BALL VALVES

REDUCED BORE, SCREWED ENDS.

DATE APPD	JUN.18.'18	DRAWING NO	△		
APPD BY	H. NAKAGAWA	965-C60004	△		
CHKD BY	Y. OSADA		△		
DSGND BY	D. YOHA		△		
DRAWD BY	H. HATANO	REV-06	MARK	DATE	BY

KITZ CORPORATION

KITZ