Butterfly Valve Type 57 (Manual Type)

Features



- High durability and flow characteristics in addition to excellent operability thanks to 19-STEP fine opening adjustment
- Plastic GEAR BOX with excellent corrosion resistance
- Easy switching from lever type to gear type or automatic valve
- Handle lever open/close direction can be changed.

Basic specifications

- Valve Type			:	Butterfly Valve Type 57
- Size	/	Lever Type	:	40 mm – 200 mm (1 1/2 inch – 8 inch)
	/	Gear Type		40 mm – 350 mm (1 1/2 inch - 14 inch)
- Body Material			:	U-PVC (Conforming to ASTM D1784 Cell Classification 12454A)
				PP (Conforming to ASTM D4101 Cell Classification PP0110B67272)
				PVDF (Conforming to ASTM D3222 Cell Classification Type II)
- Seal Material	/	Seat	:	EPDM, FKM etc.
- Connection	/	Wafer	:	JIS B2220 10K, JIS B2220 5K, DIN/EN1092-1, ANSI B16.5

Body Material	Fluid Temperature ˚C {˚F}	Maximum Working Pressure (Nominal Temperature) MPa {psi}	
		40mm — 250mm	300mm, 350mm
U-PVC	0 ~ 50 { 30~122 }	1.0 {150}	0.75 {110}
PP	-20 ~ 80 { -5~176 }	1.0 {150}	0.75 {110}
PVDF	-20 ~ 120 { -5~250 }	1.0 {150}	0.75 {110}

Note: The maximum working pressure is the value including the water hammer pressure. Be careful that the maximum working pressure is not exceeded during use.

＊ Concerning the allowable pressure for each temperature and material, see the technical documents at the next page of this sheet.

Certificate / Approval

PED, ABS, NSF/ANSI61 “For details of applicable products, please consult us.”

Working pressure vs. Temperature

MANUAL

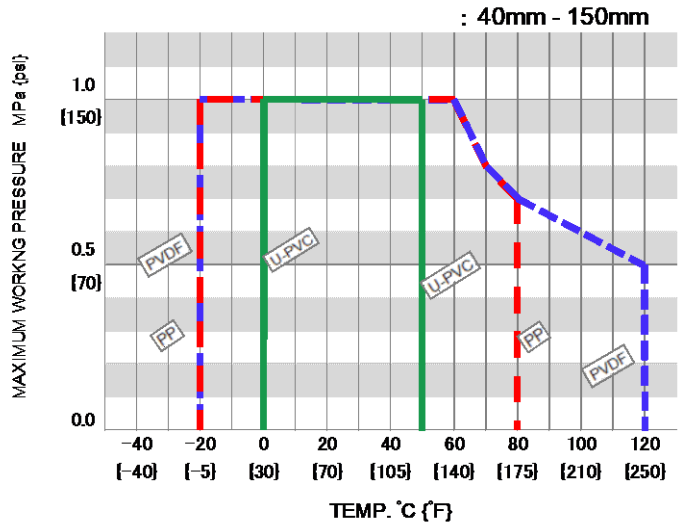

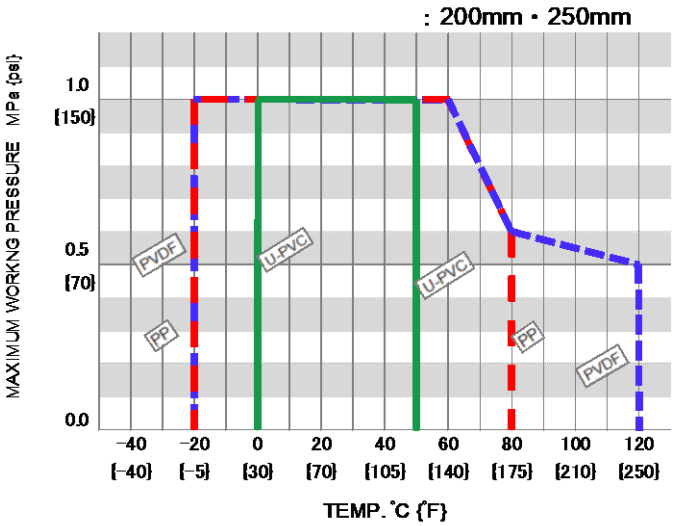

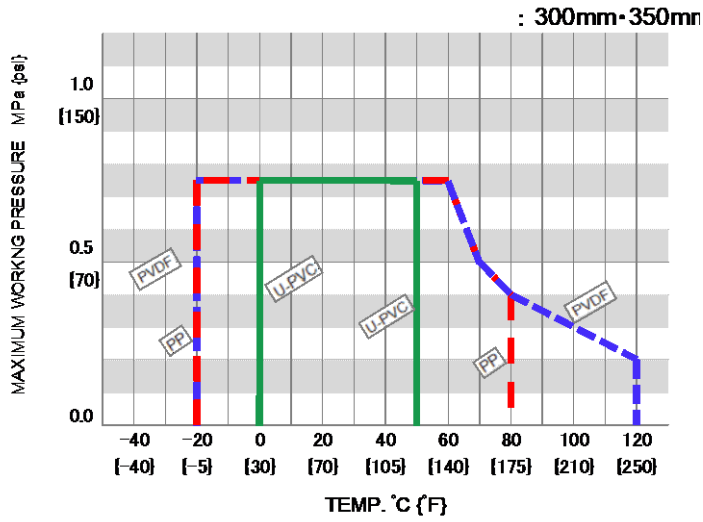

Note : Make sure that the temperature and pressure are within the working range during operation.
(If the tolerance range is exceeded during use, the valve may be damaged.)

Product dimension

[LEVER TYPE]

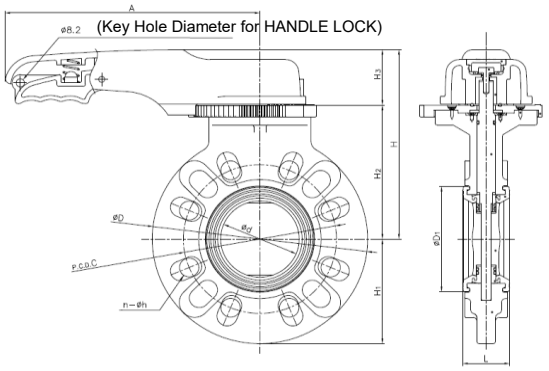

[GEAR TYPE]

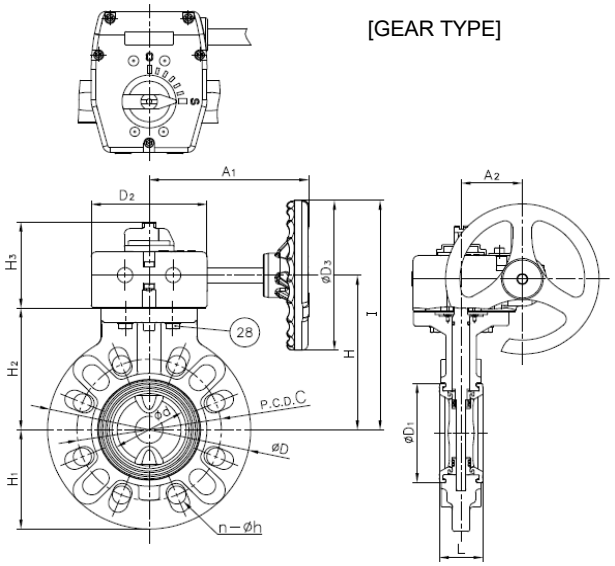

■JIS, DIN (Unit: mm)

mm	d	D	D1	D2	D3	L	I	A	A_1	A_2	H		H_1	H_2		H_3		JIS 5K			JIS 10K			DIN PN10		
											LEVER TYPE	GEAR TYPE		LEVER TYPE	GEAR TYPE	LEVER TYPE	GEAR TYPE	C	n	h	C	n	h	C	n	h
40	45	150	71	122	160	39	210	220	167	64	156	130	75	100	95	56	92	95	4	15	105	4	19	110	4	18
50	56	165	81	122	160	42	220	220	167	64	166	140	83	110	105	56	92	105	4	15	120	4	19	125	4	18
65	69	185	95	122	160	46	230	220	167	64	176	150	93	120	115	56	92	130	4	15	140	4	19	145	4	18
80(75)	77	211	105	122	160	46	245	250	167	64	191	165	106	135	130	56	92	145	4	19	150	8	19	160	8	18
100	102	238	134	122	160	56	260	250	167	64	206	180	119	150	145	56	92	165	8	19	175	8	19	180	8	18
125	129	255	169	122	160	66	275	320	167	64	237	195	128	168	160	69	92	200	8	19	210	8	23	210	8	18
150	150	285	190	122	160	71	290	320	167	64	252	210	143	183	175	69	92	230	8	19	240	8	23	240	8	22
200	195	350	242	122	160	87	321	400	167	64	283	241	170	214	206	69	92	280	8	23	290	12	23	295	8	22
250	250	421	302	122	160	112	356	-	167	64	-	276	211	-	241	-	92	345	12	23	355	12	25	350	12	22
300	303	488	360	188	300	129	490	-	272	99	-	340	244	-	298	-	108	390	12	23	400	16	25	400	12	22
350	351	539	393	188	300	129	517	-	272	99	-	367	270	-	325	-	108	435	12	23	445	16	25	460	16	22

■ANSI (Unit: inch)

inch	mm	d	D	D_1	D_2	D_3	L	I	A	A_1	A_2	H		H_1	H_2		H_3		ANSI CLASS 150			GEAR BOX TYPE
												LEVER TYPE	GEAR TYPE		LEVER TYPE	GEAR TYPE	LEVER TYPE	GEAR TYPE	C	n	h	
1 1/2	40	1.77	5.91	2.80	4.80	6.30	1.54	8.27	8.66	6.57	2.52	6.14	5.12	2.95	3.94	3.74	2.20	3.62	3.88	4	0.62	
2	50	2.20	6.50	3.19	4.80	6.30	1.65	8.66	8.66	6.57	2.52	6.54	5.51	3.27	4.33	4.13	2.20	3.62	4.75	4	0.75	
2 1/2	65	2.72	7.28	3.74	4.80	6.30	1.81	9.06	8.66	6.57	2.52	6.93	5.91	3.66	4.72	4.53	2.20	3.62	5.50	4	0.75	
3	80(75)	3.03	8.31	4.13	4.80	6.30	1.81	9.65	9.84	6.57	2.52	7.52	6.50	4.17	5.31	5.12	2.20	3.62	6.00	4	0.75	
4	100	4.02	9.37	5.28	4.80	6.30	2.20	10.24	9.84	6.57	2.52	8.11	7.09	4.69	5.91	5.71	2.20	3.62	7.50	8	0.75	TYPE1
5	125	5.08	10.04	6.65	4.80	6.30	2.60	10.83	12.60	6.57	2.52	9.33	7.68	5.04	6.61	6.30	2.72	3.62	8.50	8	0.88	
6	150	5.91	11.22	7.48	4.80	6.30	2.80	11.42	12.60	6.57	2.52	9.92	8.27	5.63	7.20	6.89	2.72	3.62	9.50	8	0.88	
8	200	7.68	13.78	9.53	4.80	6.30	3.43	12.64	15.75	6.57	2.52	11.14	9.49	6.89	8.43	8.11	2.72	3.62	11.75	8	0.88	
10	250	9.84	16.57	11.89	4.80	6.30	4.41	14.02	-	6.57	2.52	-	10.87	8.31	-	9.49	-	3.62	14.25	12	1.00	
12	300	11.93	19.21	14.17	7.40	11.81	5.08	19.29	-	10.71	3.90	-	13.39	9.61	-	11.73	-	4.25	17.00	12	1.00	TYPE3
14	350	13.82	21.22	15.47	7.40	11.81	5.08	20.35	-	10.71	3.90	-	14.45	10.63	-	12.80	-	4.25	18.75	12	1.12	

Parts list

[LEVER TYPE]

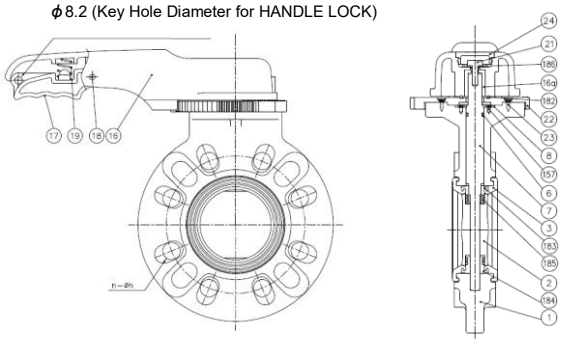

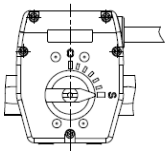

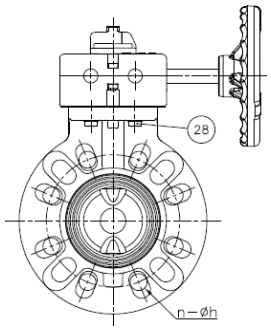

[GEAR TYPE]

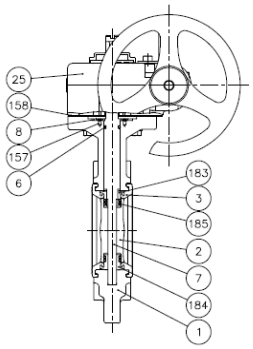

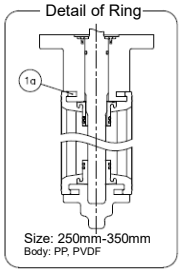

PART NO./NAME		QTY	MATERIAL
1	BODY	1	BODY / DISC, SEAT BUSH
2	DISC	1	U-PVC / PP
183	SEAT BUSH (A)	1	PP / PP
184	SEAT BUSH (B)	1	PVDF / PVDF
3	SEAT	1	EPDM, FKM , etc.
6	O-RING (C)	1	
185	O-RING (I)	4	
7	STEM	1	Standard products; STAINLESS STEEL(SUS403) Optional parts products; STAINLESS STEEL(SUS316)
8	STEM HOLDER (A)	1	PP
157	SCREW (F)	4	STAINLESS STEEL(SUS304)

ONLY USED LEVER

PART NO./NAME		QTY	MATERIAL
16	HANDLE (A)	1	PP
16a	HANDLE INSERTED METAL	1	STAINLESS STEEL (SUS316L)
17	HANDLE LEVER	1	PPG
18	PIN	1	PPG
19	SPRING	1	STAINLESS STEEL(SUS304)
21	BOLT (B)	1	STAINLESS STEEL(SUS304)
22	LOCKING PLATE	1	PPG
23	SCREW (B)	4	STAINLESS STEEL(SUS304)
24	CAP (A)	1	PP
182	O-RING (H)	1	EPDM
186	WASHER WITH RUBBER	1	STAINLESS STEEL(SUS304) +EPDM

ONLY USED FOR GEAR TYPE

PART NO./NAME		QTY	MATERIAL
25	GEAR BOX	1	PLASTIC etc.
28	BOLT (C)	4	STAINLESS STEEL(SUS304)
158	GASKET (L)	1	EPDM
1a	RING	2	STEEL(SS400) (Unichrome coated) When the body material is PP or PVDF, used for 250 - 350mm.

Cv value for each opening degree

mm	40	50	65	80	100	125	150	200	250	300	350
inch	1 1/2	2	2 1/2	3	4	5	6	8	10	12	14
BUTTERFLY VALVE TYPE 57	71	120	250	300	470	830	1,100	2,500	3,860	5,700	6,440

NOTE:
The values shown are reference values, not guaranteed values.

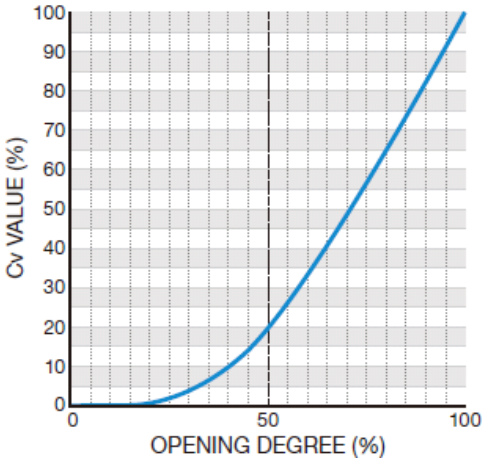

Operating torque

UNIT : N・m

mm	inch	Operation torque (O→S)	
		EPDM	FKM, FKM-F/C
40	1 1/2	5	5
50	2	10	10
65	2 1/2	15	15
80	3	20	20
100	4	30	30
125	5	40	40
150	6	65	75
200	8	165	200
250	10	300 (25)	300 (25)
300	12	330 (22)	510 (34)
350	14	400 (27)	640 (43)

Note :

40mm-200mm: Lever type, 250mm-350mm: Gear type. ( )gear handle torque.

The values shown are reference values, not guaranteed values.

Pipe bolt dimensions（reference：recommended data）

BUTTERFLY VALVE TYPE 57

■ JIS 10K

UNIT : mm

mm	inch	BOLT A			QTY		
		d	L	S	BOLT A	BOLT B	NUT/WASHER
40	1 1/2	M16	115	40	4	–	8
50	2		125				
65	2 1/2		135	45			
80	3		135		8		16
100	4		145				
125	5	M20	165	50			
150	6		175	55			
200	8		195		12		24
250	10	M22	225	60			
300	12		245		16		32
350	14		255	65			

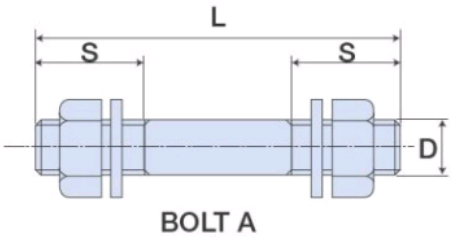

Note :

(1) In the above list, the values for size 40 to 350 mm indicate the bolt dimensions when an AVTS flange is used.

(2) The quantity of nuts and washers for Bolt A indicates the number of 2 sets (1 bolt / 2 nuts, 2 washers).

Product weight list (reference)

LEVER TYPE / GEAR TYPE Unit : kg

mm	inch	TYPE 57		
		U-PVC	PP	PVDF
40	1 1/2	1.3 / 3.4	1.1 / 3.1	1.4 / 3.5
50	2	1.5 / 3.5	1.2 / 3.3	1.7 / 3.8
65	2 1/2	1.7 / 3.8	1.4 / 3.4	1.9 / 4.0
80	3	1.9 / 3.9	1.6 / 3.6	2.2 / 4.2
100	4	2.5 / 4.5	2.0 / 4.0	2.9 / 4.9
125	5	4.9 / 6.5	4.0 / 5.6	5.7 / 7.3
150	6	5.8 / 7.4	4.6 / 6.2	6.9 / 8.5
200	8	9.3 / 10.7	7.4 / 8.9	11.0 / 12.5
250	10	– / 14.7	– / 12.2	– / 18.6
300	12	– / 28.0	– / 24.0	– / 34.5
350	14	– / 30.2	– / 26.3	– / 36.8

Product model code list

ACTUATION	TYPE	OPERATING SYSTEM	BODY MATERIAL	SEAL MATERIAL	CONNECTION	STANDARD	SIZE
V	57	**	*	*	W	*	***
:	:	:	:	:	:	:	:
V MANUAL VALVE	57 TYPE 57	LV LEVER TYPE	U U-PVC	E EPDM	W WAFER	1 10K	040 40mm
		SG SIDE GEAR TYPE	P PP	V FKM		5 5K	⟆
			F PVDF			W –	350 350mm
						D DIN	
						A ANSI	

Installation, Operation and Maintenance Manual

"For details of Installation, Operation and Maintenance, please contact our nearest distribution agent or sales office.