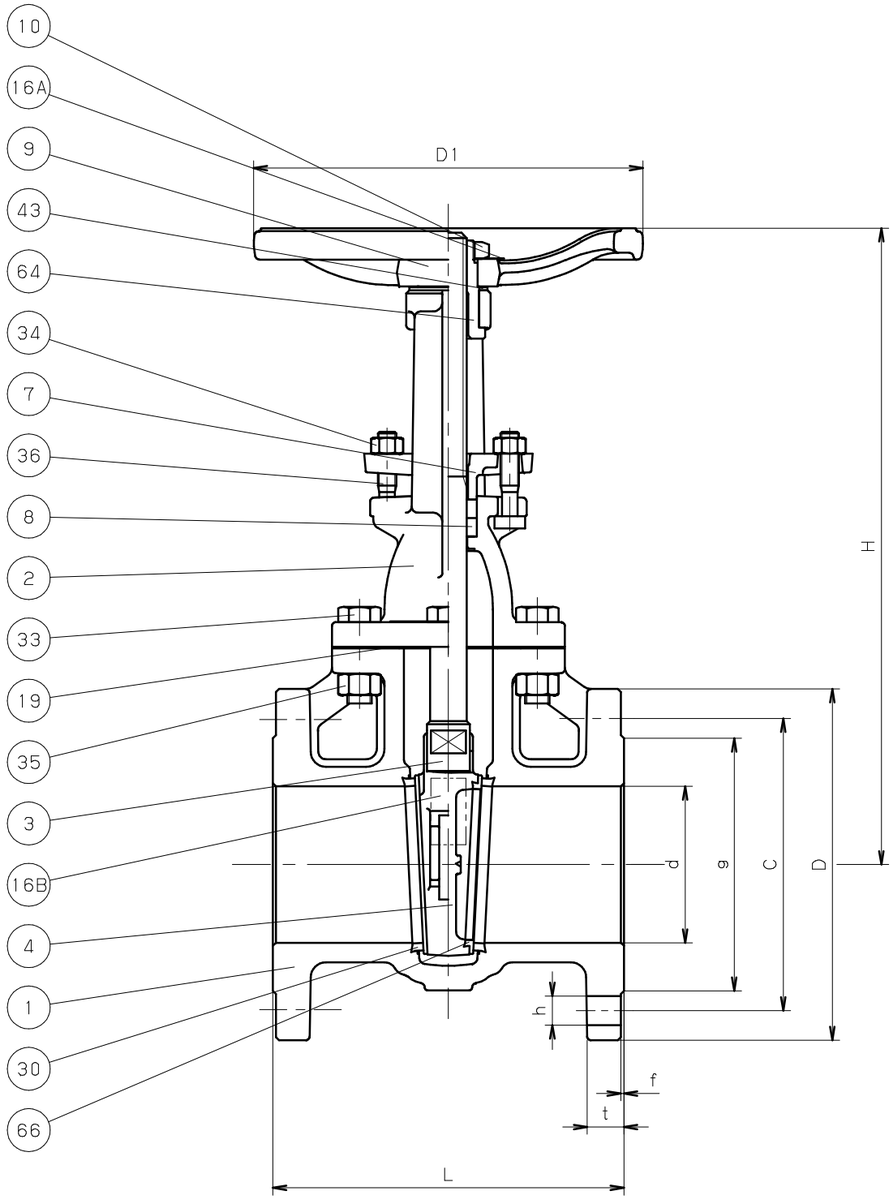

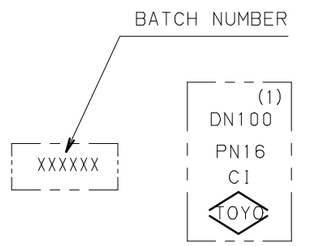

ONE SIDE THE OTHER SIDE

MARKING ON THE BODY

NO	NAME OF PARTS	QTY	MATERIALS	SPECIFICATIONS
1	BODY	1	CAST IRON	EN-GJL-250
2	BONNET	1	CAST IRON	EN-GJL-250
3	STEM	1	BRASS	CW611N
4	DISC	1	CAST IRON	EN-GJL-250
7	GLAND	1	DUCTILE IRON	
8	GLAND PACKING	1S	GRAPHITE	EN-GJL-250
9	HAND WHEEL	1	CAST IRON	S235 JR
10	WHEEL NUT	1	STEEL	
16A	NAME PLATE	1	STAINLESS STEEL	
16B	NAME PLATE	1	STAINLESS STEEL	
19	GASKET	1	GRAPHITE	
30	BODY SEAT RING	2	CAST BRONZE	CC491K
33	BONNET NUT	1S	STEEL	S235 JR
34	GLAND NUT	2	STEEL	S235 JR
35	BONNET BOLT	1S	STEEL	S235 JR
36	GLAND BOLT	2	STEEL	S235 JR
43	WHEEL WASHER	1	BRASS	CW611N
64	STEM NUT	1	CAST BRASS	
66	DISC SEAT RING	2	CAST BRONZE	CC491K
			1S=1 SET	

STANDARD		
	FACE TO FACE OR END TO END	EN558 PN16 BASIC SERIES 3
	END CONNECTION	EN1092-2 PN16
	WALL THICKNESS	ASME B16.1
	PRESSURE TEST	MANUFACTURERS STANDARD
PRODUCT CODE		500AF
FIGURE		EAEN16-FSRF<GA101>

DIMENSIONS

UNIT:mm

NOMINAL SIZE						END FLANGE							APPROX. MASS	
							BOLT HOLE							
NPS	DN	d	H	D1	L	D	C	NO.	h	g	t	f	(kg)	
2	50	50	258	178	178	165	125	4	19	99	20	3	13	
2.1/2	65	65	302	200	190	185	145	4	19	118	20	3	17	
3	80	80	341	200	203	200	160	8	19	132	22	3	23	
4	100	100	415	254	229	220	180	8	19	156	24	3	38	
5	125	125	484	254	254	250	210	8	19	184	26	3	48	
6	150	150	560	280	267	285	240	8	23	211	26	3	65	
8	200	200	703	300	292	340	295	12	23	266	30	3	106	

NOTE (1) VALVE SIZE (DN) IDENTIFICATION.

EN1171 PN16 CAST IRON GATE VALVES

BOLTED BONNET, OUTSIDE SCREW, RISING STEM, FLANGED ENDS.

DATE APPD	DEC.13.'18	DRAWING NO	△		
APPD BY	H. NAKAGAWA	R11-A00326	△		
CHKD BY	K. NAKAMURA		△		
DSGND BY	K. HAYASHI		△		
DRAWN BY	S. AMANO	REV-00	MARK	DATE	BY

Toyo Valve/ KITZ Corp.